Design Template For Bespoke Selector Switches

Customer Name ....

Address ....
....
....

Post Code ....

Tel: ....

Fax: ....

email: ....

Electrical Parameters

Operational Current (I_e) ....A

Operational Voltage (U_e) ....V *a.c.* ☐ *d.c.* ☐

Description of load ....

Steady state load ....kW

Duty *Frequent* ☐ *Infrequent* ☐

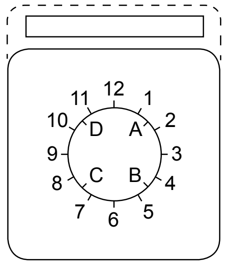

Switch Positioning Mechanism
30° ☐ 45° ☐
60° ☐ 90° ☐

		1 2	4 3	5 6	8 7	9 10	12 11	13 14	16 15	17 18	20 19	21 22	24 23	25 26	28 27	29 30	32 31	33 34	36 35	37 38	40 39	41 42	44 43	45 46	48 47
	6																								
	5																								
	B																								
	4																								
	3																								
	2																								
	A																								
	1																								
	12																								
	11																								
	D																								
	10																								
	9																								
	8																								
	C																								
	7																								

Please indicate the terminal markings required for each contact or the standard C&D marking scheme will be applied.

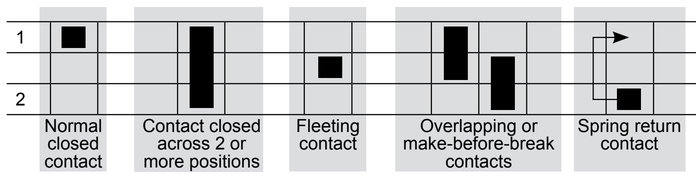

Indicate any external links you would like included.

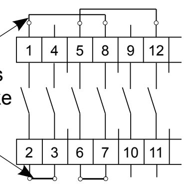

For locking handles & key actuators show the positions to be lockable by circling the position as shown

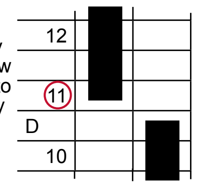

Please return to C&D via email, fax or post - details below

Design Template For Bespoke Selector Switches contd.

CRAIG & DERRICOTT

Mechanical Parameters

Rotation	Restricted ☐	Unrestricted ☐	Unidirection ☐
Mounting	Panel mounting ☐	Base Mounting (DIN rail) ☐	Base Mounting (Base plate) ☐
Terminals	Side Access ☐	Rear Access ☐	Top & Bottom ☐
Actuator	Std. Knob (5 hole fixing) ☐	Knob (single hole fixing) ☐	Key (single hole fixing) ☐
	Single hole fixing size Ø16 ☐	Ø22.5 ☐	Ø30.5 ☐
Locking Handles	Moulded (Red/Yellow) ☐	Moulded (Black) ☐	Die cast aluminium ☐
	Die cast options LHC (Pull to lock) ☐	LHD (Press to release) ☐	K (Key locking) ☐
	Die cast handle options SM ☐	SA ☐	

Please describe any other options you require ....
....

NB - 'We will come back to you and advise the best options to suit the choices you have made'.

Indicator Plates

The plates shown below can be used with the following switch combinations:-

Y1 - 10F **Y2** - 20C, 20F, 16X, 20X, 20N & 25N **Y3** - 32X, 40X, 32N, 40N & 63N **Y4** - 20C, 32X, 40X, 32N, 40N & 63N
(90 x 90 indicator plate available for 125N to special order. Please call for details)

All indicator plates will be produced with black lettering on a white background as standard. Other colour options are available please talk to our technical staff.

Please show your engraving requirements on the ***actual*** size diagrams below:-

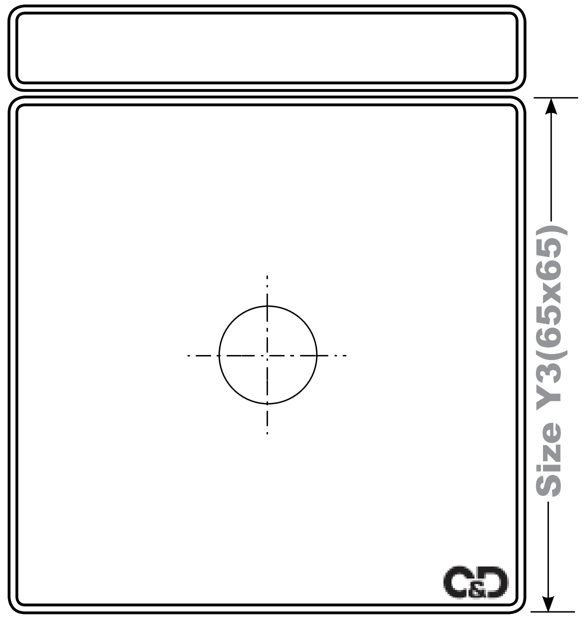

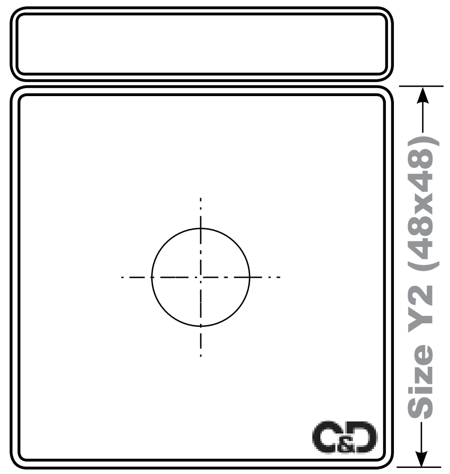

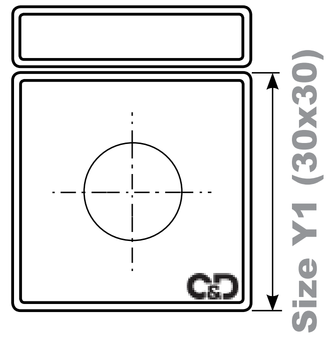

30°/60°

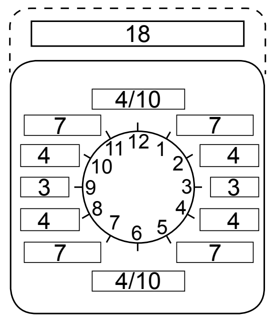

45°/90°

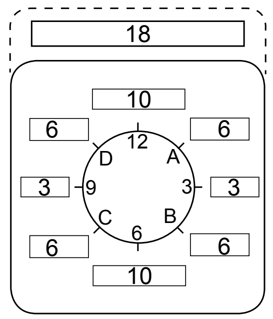

Number of characters available for engraving in each position

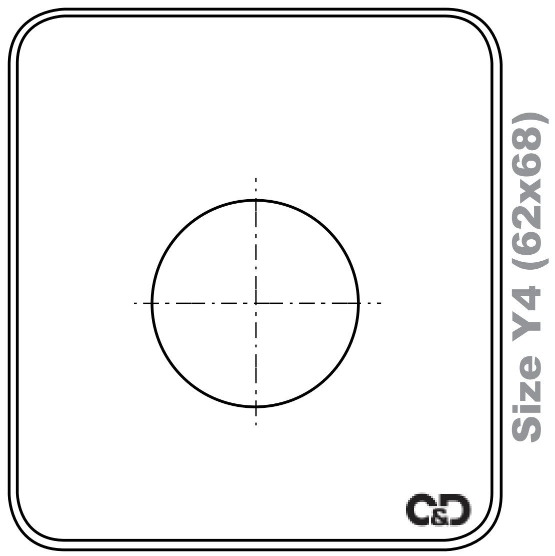

Craig & Derricott Ltd. Hall Lane, Walsall Wood, Walsall, West Midlands U.K. WS9 9DP t: +44(0)1543 375541 f: +44(0)1543 361619 e: sales@craigandderricott.com w: craigandderricott.com